IB MATHS AI HL · UNIT 3

3D Trigonometry: exam practice

10 questions · 32 marks · worked solutions and markschemes

Name _____ Date _____ Score / 32

- Answer every question before you look at the solutions. They start after the last question, with the marks for each line: M for method, A for accuracy, R for reasoning.
- Online, with more practice: ibmathrevision.com/hlai/3d-trigonometry-exam-practice

1. **2 marks · Paper 2 style · calculator allowed**

A triangular prism has a right-angled cross-section with legs 3 cm and 4 cm, and length 10 cm.

Find the longest straight line that fits inside the prism. **[2]**

2. **3 marks · Paper 2 style · calculator allowed**

A box is 40 cm long, 30 cm wide and 20 cm high.

Find the angle between the space diagonal and the base of the box. **[3]**

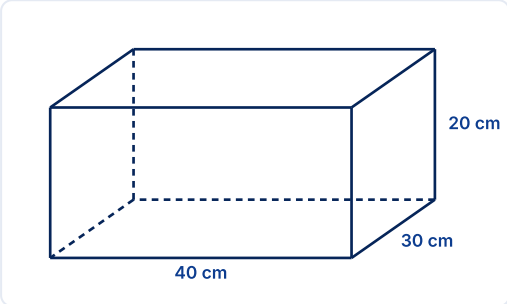

Box 40 cm by 30 cm by 20 cm

3. **3 marks · Paper 2 style · calculator allowed**

A cone has base radius 5 cm and height 11 cm.

Find the slant height and the angle the slant edge makes with the base. **[3]**

4. **3 marks · Paper 2 style · calculator allowed**

A cube has edges of 6 cm.

Find the length of a space diagonal and its angle with a face diagonal on the base. **[3]**

5. **3 marks · Paper 2 style · calculator allowed**

A ramp is a triangular prism. Its rectangular base is 5 m by 2 m and it rises to a height of 0.8 m at one end.

Find the angle of the ramp and the length of its sloping surface. **[3]**

6. **3 marks · Paper 2 style · calculator allowed**

From a point P on the ground, the angle of elevation of the top of a 45 m building is $28°$.

Find the horizontal distance from P to the building and the length of the line of sight. **[3]**

7. **3 marks · Paper 1 style · calculator allowed**

A flagpole 12 m high is held by a wire attached to the top and to the ground 5 m from the base.

Find the length of the wire and the angle it makes with the ground. **[3]**

8. **4 marks · Paper 2 style · calculator allowed**

A right pyramid has a square base of side 8 m and slant edges of 9 m.

Find the vertical height and the angle between a slant edge and the base. **[4]**

9. **4 marks · Paper 2 style · calculator allowed**

A vertical mast TF of height 30 m stands at F. A and B are on level ground with $FA = 40$ m, $FB = 50$ m and $A\hat{F}B = 90°$.

Find the angle $A\hat{T}B$. **[4]**

10. **4 marks · Paper 2 style · calculator allowed**

A cuboid $ABCDEFGH$ has $AB = 10$, $BC = 6$ and $AE = 4$ (cm), with E above A and G above C. Find the angle between the diagonal AG and the face $ABFE$. **[4]**

Answers and worked solutions

Question 1 — 2 marks

Answer: 11.2 cm

$\sqrt{3^2+4^2+10^2}$ **M1**

11.2 cm **A1**

Question 2 — 3 marks

Answer: $21.8°$

base diagonal 50 cm **A1**

$\tan\theta = \frac{20}{50}$ **M1**

$21.8°$ **A1**

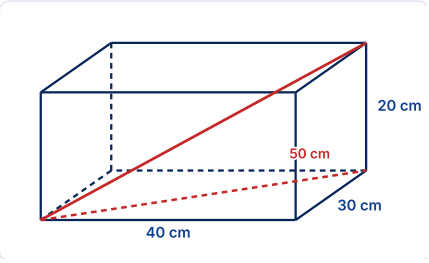

$\tan\theta = \frac{20}{50}$, $\theta = 21.8°$

Question 3 — 3 marks

Answer: 12.1 cm; $65.6°$

$\sqrt{25+121} = 12.1$ cm **A1**

$\tan\theta = \frac{11}{5}$ **M1**

$65.6°$ **A1**

Question 4 — 3 marks

Answer: 10.4 cm; $35.3°$

$6\sqrt{3} = 10.4$ cm **A1**

$\tan\theta = \frac{6}{6\sqrt{2}}$ **M1**

$35.3°$ **A1**

Question 5 — 3 marks

Answer: $9.09°$; $5.06\ m$

$\tan\theta = \frac{0.8}{5}$ **M1**

$9.09°$ **A1**

$5.06\ m$ **A1**

Question 6 — 3 marks

Answer: $84.6\ m$; $95.9\ m$

$\frac{45}{\tan 28°}$ **M1**

$84.6\ m$ **A1**

$95.9\ m$ **A1**

Question 7 — 3 marks

Answer: $13\ m$; $67.4°$

$13\ m$ **A1**

$\tan\theta = \frac{12}{5}$ **M1**

$67.4°$ **A1**

Question 8 — 4 marks

Answer: $7\ m$; $51.1°$

half-diagonal $4\sqrt{2} = 5.66$ **A1**

$h = \sqrt{81-32} = 7\ m$ **A1**

$\cos\theta = \frac{5.66}{9}$ **M1**

$51.1°$ **A1**

Question 9 — 4 marks

Answer: $72.0°$

$TA = 50$, $TB = 58.3$ **A1**

$AB = 64.0$ **A1**

cosine rule **M1**

$72.0°$ **A1**

Question 10 — 4 marks

Answer: $29.1°$

projection of G onto $ABFE$ is F **M1**

$AF = \sqrt{116}$ **A1**

$\tan\theta = \frac{6}{\sqrt{116}}$ **M1**

$29.1°$ **A1**

Every solution is also on ibmathrevision.com/hlai/3d-trigonometry-exam-practice
Our own original questions, written and checked by IB Math Revision. IB Math Revision is independent and is not affiliated with, endorsed by or connected to the International Baccalaureate Organization. This work/product/service has been developed independently from and is not endorsed by the International Baccalaureate Organization. International Baccalaureate, Baccalauréat International, Bachillerato Internacional and IB are registered trademarks owned by the International Baccalaureate Organization.